R18

Code No:151AD

JAWAHARLAL NEHRU TECHNOLOGICAL UNIVERSITY, HYDERABAD
B .Tech I Year I Semester Examinations, December - 2018
ENGINEERING GRAPHICS
(ELECTRONICS AND COMMUNICATION ENGINEERING)

Time : 3 hours **Max Marks: 75**

Answer any five questions
All questions carry equal marks
- - -

1.a) The foci of an ellipse are 100 mm apart and the minor axis is 50 mm long. Determine the length of the major axis and draw the ellipse, left half by concentric circles method and Right half by oblong method.

b) The length of 500 m represented by a lie of 15 cm on the drawing. Construct a vernier scale to read up to 600 m. Mark on a scale the length of 549 m. [15]

OR

2. A ball thrown up in the air reaches a maximum height of 45 meters and travels a horizontal distance of 75 meters. Trace the complete path of the ball, assuming it to be parabolic; Find the direction of travel of the ball at a height of 15 meters from the ground (Scale 1 :500). [15]

3.a) A regular pentagon of 30 mm sides is resting on HP on one of its sides while its opposite vertex (corner) is 30 mm above HP. Draw projections when side in HP is 30^0 inclined to VP.

b) Two points A and B are in the H.P. The point A is 30 mm in front of the V.P, while B is behind the V.P. The distance between their projectors is 75 mm and the line joining their top views makes an angle of 45^0 with xy. Find the distance of the point B, from the V.P. [15]

OR

4. A circle of 50 mm diameter is resting on the ground on a point with its plane inclined at 30^0 to the ground. Draw the projections of the circle when: a) The top view of the diameter through the resting point makes an angle of 45^0 with xy and b) The diameter passing through the resting point makes an angle 45^0 with the V.P [15]

5. A square prism of base 50 mm side and 100 mm height stands with its base on the ground such that all the rectangular faces are equally inclined to the V.P. It is cut by a section plane perpendicular to the V.P such that the true shape of the section is a rhombus of longer diagonal 90 mm. Find the inclination of the section plane with the H.P and draw the front view, sectional top view and true shape of the section. [15]

OR

6. A pentagonal pyramid has an edge of the base in the V.P and inclined at 30^0 to the H.P, while the triangular face containing that edge makes an angle 45^0 with the V.P. Length of the side of the base being 30 mm and length of the axis 75 mm. Draw the projections of the solid. [15]

www.manaresults.co.in

7. A pentagonal prism 20 mm side of base and 45 mm height stands vertically on its base with two of its rectangular faces equally inclined to the V.P. The V.T of the cutting plane inclined at 45^0 to the axis of the prism, passes through the left comer of the top face of the prism. Develop the lower portion of the lateral surface of the prism. [15]

OR

8. Cone with a base diameter of 64 mm and an axis length of 70 mm is kept on its base on the HP. A cylinder of diameter 30 mm and length 90 mm penetrates the cone horizontally. The axis of the cylinder is 20 mm above the base of the cone and 5 mm away from the axis of the latter. Draw the three views of the solids showing curve of intersection. [15]

9. Draw the front view, left side view, and top view. (All dimensions are in mm) [15]

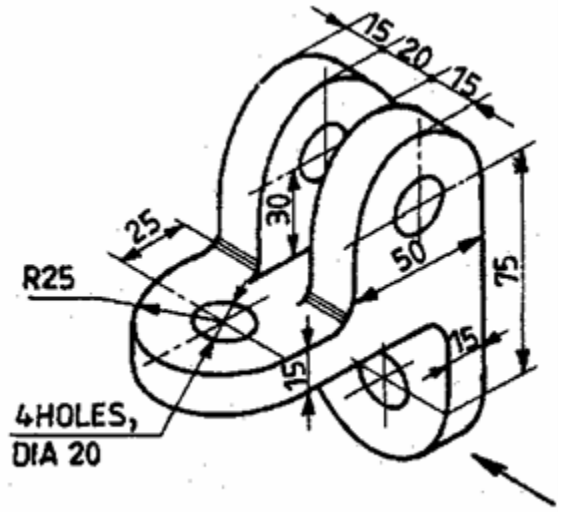

OR

10. A circular block, 75 mm diameter and 25 mm thick, is pierced centrally through its flat faces by a square prism, base 35 mm side and 125 mm long, which comes out equally on both sides of the block. Draw the isometric projection of the combination when the combined axis is horizontal. [15]

---ooOoo---

www.manaresults.co.in